SPECIFICATION

IMAGE FORMAT	1/1.8"
FOCAL LENGTH	4.2mm
F.O.V.	94°(D)
	86°(H)
	51°(V)
RESOLUTION	2 MP
DISTORTION	<-6.9%
APERTURE	F1.8
MOUNT	M12x0.5
IRIS	Fixed
M.O.D.	0.3m
B.F.L.	6.18mm
DIMENSION	Φ25x23.1mm
LENS COMPOMEMT	6G
IR	Corrected

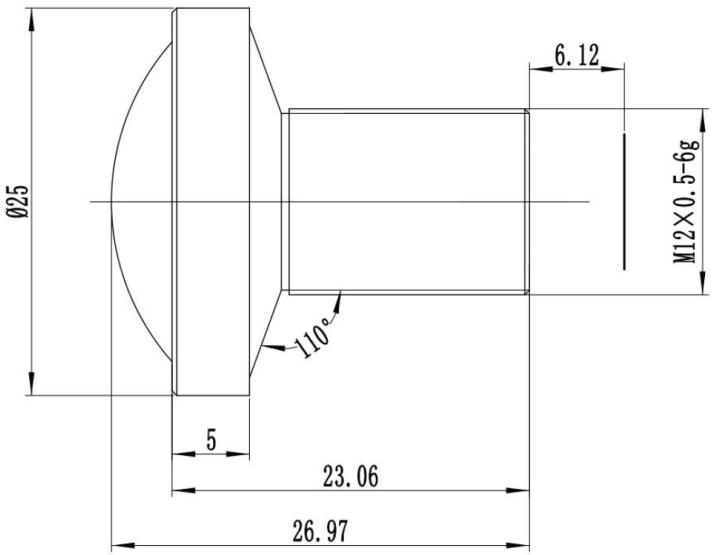

SCALE		DRAWN		MODEL	**CCL118042MP**	REV	DESCRIPTION	DATE	NAME
DATE		CHECK		TOWIN 香港致远电子集团有限公司 HONGKONG TOWIN ELECTRONICS CO.,LTD.		①			
UNIT	mm	APPROVE				②			
						③			