SPECIFICATION

IMAGE FORMAT	1/2.5"
FOCAL LENGTH	6-60mm
H F.O.V.	43°~5.5°
RESOLUTION	3 Megapixel
APERTURE	F1.4
MOUNT	CS
IRIS	DC Auto
FOCUS	Manual
ZOOM	Manual
M.O.D.	0.3m
B.F.L.	8.64~12.95mm
IR	Corrected

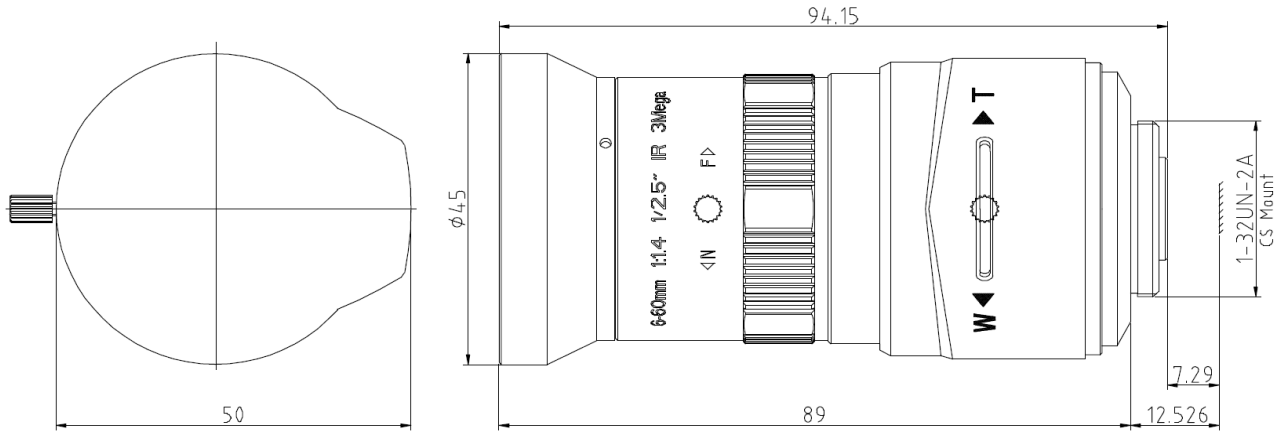

SCALE		DRAWN		MODEL	**CCL1250660AMP**	REV	DESCRIPTION	DATE	NAME
DATE		CHECK		香港致远电子集团有限公司 HONGKONG TOWIN ELECTRONICS CO.,LTD.		①			
UNIT	mm	APPROVE				②			
						③			